REACH ANYWHERE

Press the Flexology Lock Release button to lower the angle of the wand to increase your reach.

STORE ANYWHERE

Press the Flexology Lock Release button and fold the handheld vacuum forward.

To vacuum, lift up the handheld vacuum, until the wand locks in place.

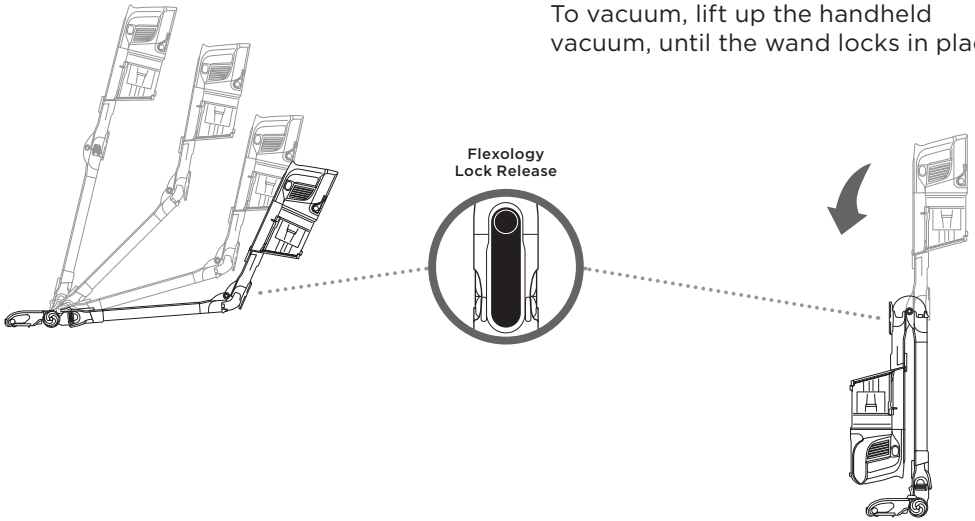

EMPTYING THE DUST CUP

1. To empty dust cup, first disconnect the handheld vacuum from the wand by pressing the Wand Release button and pulling up on the handheld vacuum.

2. Position dust cup over a trash bin and slide the lid release button forward.

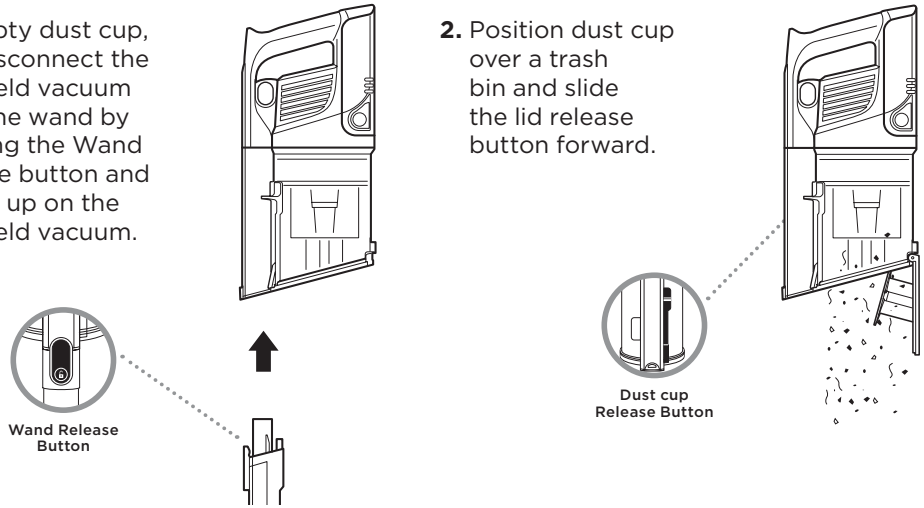

Shark

@sharkcleaninguk

©2019 SharkNinja Operating LLC. SHARK, DUOCLEAN and FLEXOLOGY are registered trademarks of SharkNinja Operating LLC.

IZ201UK_IZ251UK_QSG_MP_190814_Mv1

Please make sure to read the enclosed Shark® instructions prior to using your vacuum

duoclean

ANTI HAIR WRAP

Shark

Anti-Hair Wrap & DuoClean Cordless Vacuum

QUICK START GUIDE

Use this Quick Start Guide to start using your new vacuum's great features.

For questions, visit us online at **sharkclean.eu**

IZ201UK and IZ251UK series

WHAT'S INSIDE:

- A Handheld Vacuum
- B Motorised Floor Nozzle
- C Flexology Wand
- D Upholstery Tool
- E Crevice Tool
- F Dusting Brush
- G Anti-Allergen Dusting Brush (Certain Models only)
- H Lithium-Ion Battery (2x Certain Models only)
- I Lithium-Ion Power Pack Charger
- J Dual Charging Dock (Certain Models only)
- K Motorised Pet Brush (Certain Models only)

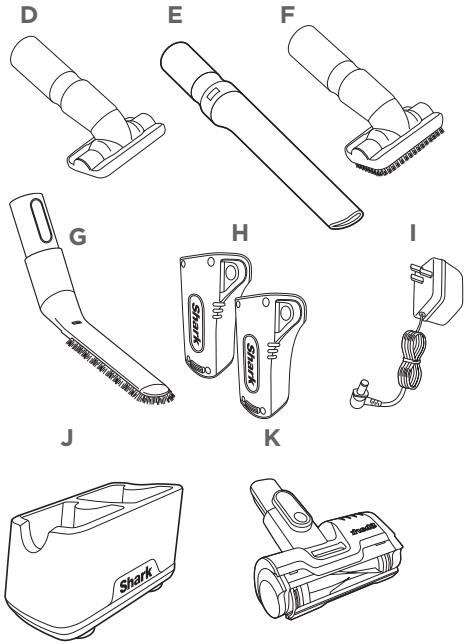

For additional parts and accessories, visit sharkaccessories.eu

ASSEMBLY

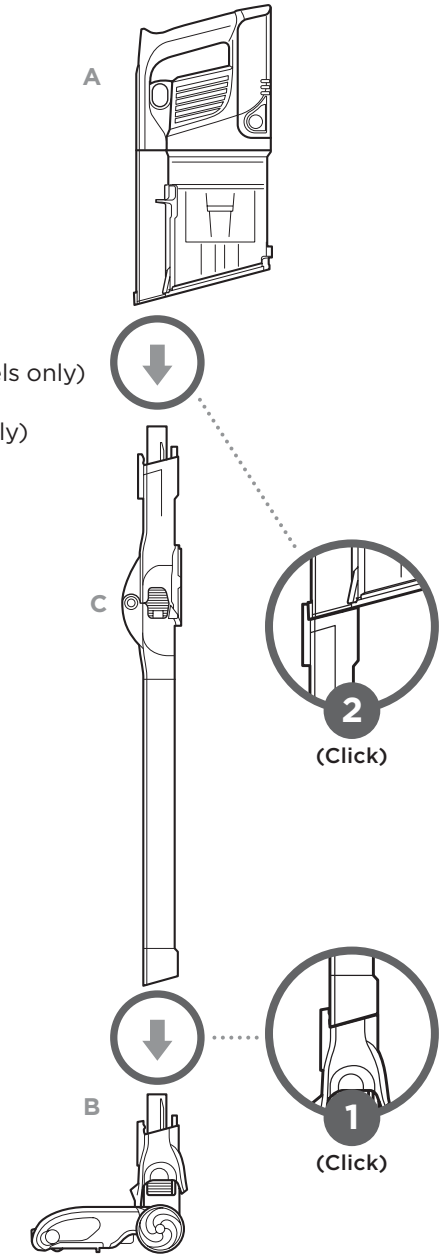

POWER SETTINGS

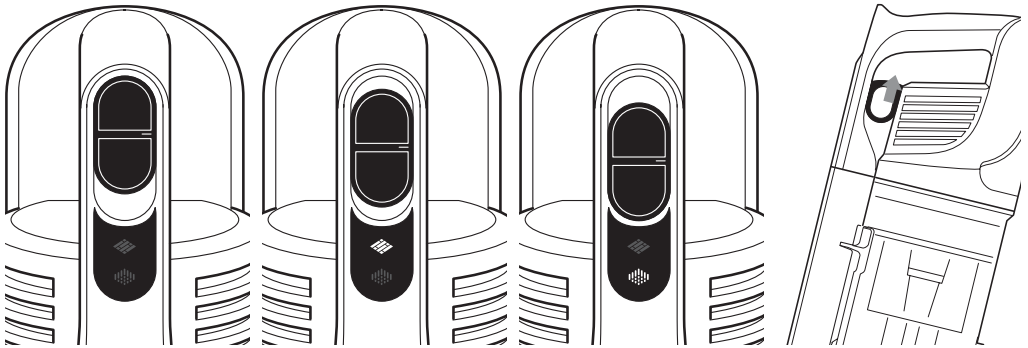

OFF	HARD FLOOR SETTING	CARPET SETTING	BOOST MODE
Slide switch to the top to turn off power. To begin vacuuming, slide switch to the appropriate setting.	The brush-roll spins slowly to clean hard floors and low-pile area rugs.	The brush-roll spins faster to pick up debris below the surface of your carpets.	For an added boost in power, pull the **Trigger** on the handheld vacuum. Release it to return to standard power.

LITHIUM-ION POWER PACK

In Use

Full Charge | Mid Charge | Low Charge | Nearly Empty | No Charge

Charging

Low Charge | Mid Charge | Nearly Full | Full Charge

NOTE: Full charge takes approximately 3 hours.

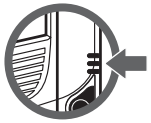

Battery Indicator Lights

NOTE: The LITHIUM-ION Power Pack battery comes partially charged. Charge fully before first use, then run the battery down until it is completely out of power. This will condition the battery so the LED indicators will work properly.

CHARGING

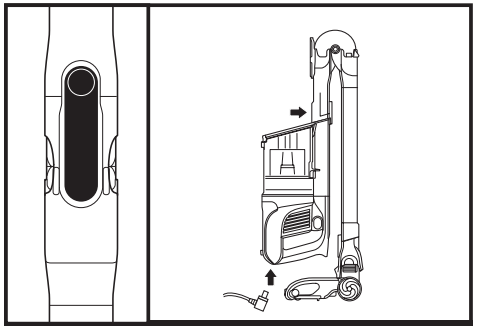

IN THE VACUUM: FLEXOLOGY® WAND

To put the vacuum in storage mode, press the **Unlock** latch while folding the handheld vacuum forward until the wand clicks and locks. Plug the charger into the charging port on the handheld vacuum.

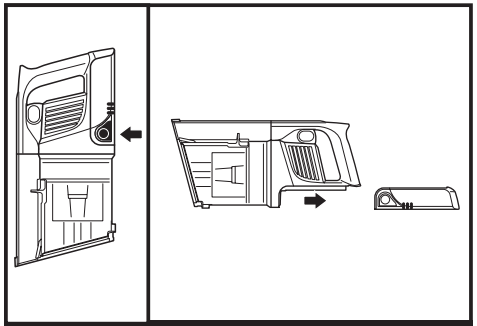

OUT OF THE VACUUM

To remove the battery, squeeze the **Battery Release Button** and slide backwards. Plug the charger into the charging port on the battery.